Range 58
VALVES

Non-return check valves

Model 58772 Wafer double disc swing check valve PN40 - FKM gasket - 316 stainless steel

Specifications

Dimensions: DN50 to DN300 (2" to 12")
Connection: between flanges in accordance with EN 1092-1
Pressure: PN40
Max. Temperature: - 25°C to +180°C
Material: 316 or CF8M stainless steel
(for the parts that can come into contact with the transported fluid)

ISO 9001
BUREAU VERITAS Certification

Béné Inox – 11 chemin de la Pierre Blanche – 69800 SAINT-PRIEST – S.A.S with 240 000 € share capital – SIREN N° 311 810 287
Tel. N°: +33 (0)4 78 90 48 22 – Fax N°: +33 (0)4 78 90 69 59 – www.bene-inox.com – bene@bene-inox.com

Technical information, illustrations and photographs are provided for information only, they are not contractual. Some may vary according to the tolerances accepted in the profession and the applicable standards. All instructions for use, disassembly and maintenance are recommendations only. These could also vary depending on product usage conditions, its installation environment and purchaser requirements – of which the purchaser alone is responsible for their definition.

A-A cross section

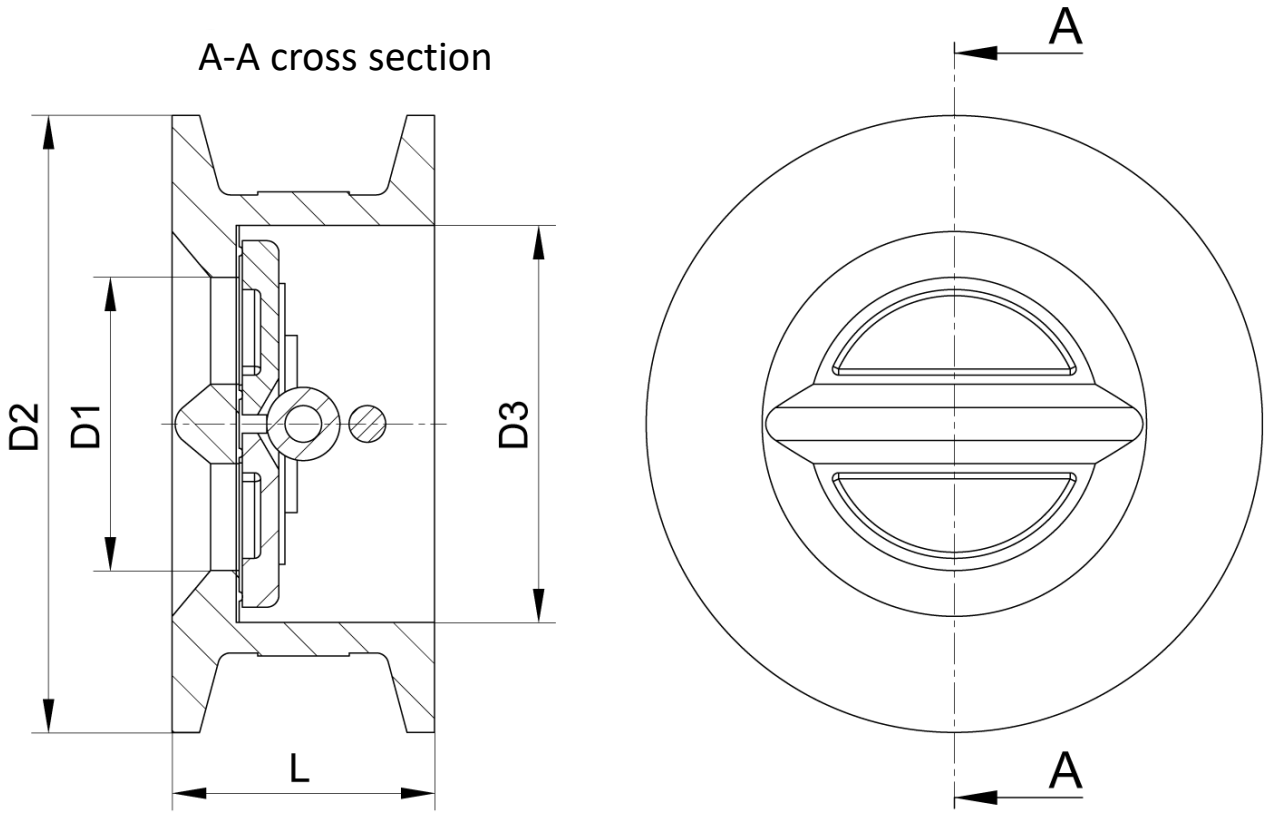

Fluid direction

DN (mm)	NB (inches)	D1 (mm)	D2 (mm)	D3 (mm)	L (mm)	Weight (kg)	Part number
50	**2"**	48	101	65	43	1.05	**458772-50**
65	**2"1/2**	59	120	80	46	1.45	**458772-65**
80	**3"**	72	133	94	64	2.30	**458772-80**
100	**4"**	90	162	117	64	3.35	**458772-100**
125	**5"**	110	192	145	70	5.25	**458772-125**
150	**6"**	135	218	170	76	7.15	**458772-150**
200	**8"**	175	273	224	89	11.85	**458772-200**
250	**10"**	222	328	265	114	20.30	**458772-250**
300	**12"**	264	376	310	114	28.35	**458772-300**

Béné Inox – 11 chemin de la Pierre Blanche – 69800 SAINT-PRIEST – S.A.S with 240 000 € share capital – SIREN N° 311 810 287
Tel. N°: +33 (0)4 78 90 48 22 – Fax N°: +33 (0)4 78 90 69 59 – www.bene-inox.com – bene@bene-inox.com

Technical information, illustrations and photographs are provided for information only, they are not contractual. Some may vary according to the tolerances accepted in the profession and the applicable standards. All instructions for use, disassembly and maintenance are recommendations only. These could also vary depending on product usage conditions, its installation environment and purchaser requirements – of which the purchaser alone is responsible for their definition.

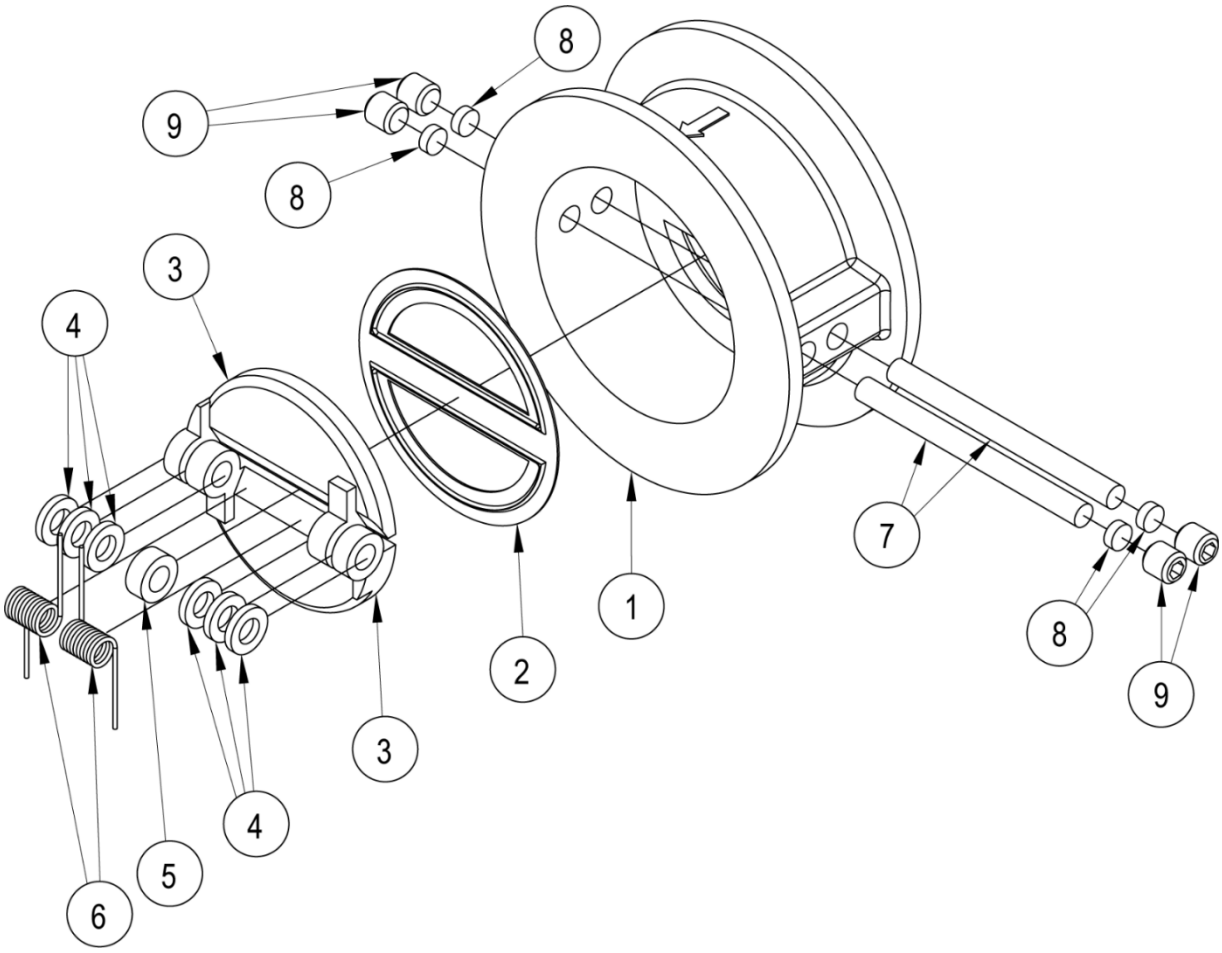

N°	Part Name	Material
1	BODY	CF8M
2	GASKET (SEAT)	FKM
3	DISC (CHECK VALVE)	CF8M
4	HINGE RING	PTFE
5	HINGE RING	PTFE
6	SPRING	AISI 316
7	DISC HINGE	AISI 316
8	FULL GASKET	FKM
9	SCREW	AISI 316

Béné Inox – 11 chemin de la Pierre Blanche – 69800 SAINT-PRIEST – S.A.S with 240 000 € share capital – SIREN N° 311 810 287
Tel. N°: +33 (0)4 78 90 48 22 – Fax N°: +33 (0)4 78 90 69 59 – www.bene-inox.com – bene@bene-inox.com

Technical information, illustrations and photographs are provided for information only, they are not contractual. Some may vary according to the tolerances accepted in the profession and the applicable standards. All instructions for use, disassembly and maintenance are recommendations only. These could also vary depending on product usage conditions, its installation environment and purchaser requirements – of which the purchaser alone is responsible for their definition.

Use

Pressure and temperature

For pressure/temperature ratings, see the graph below.

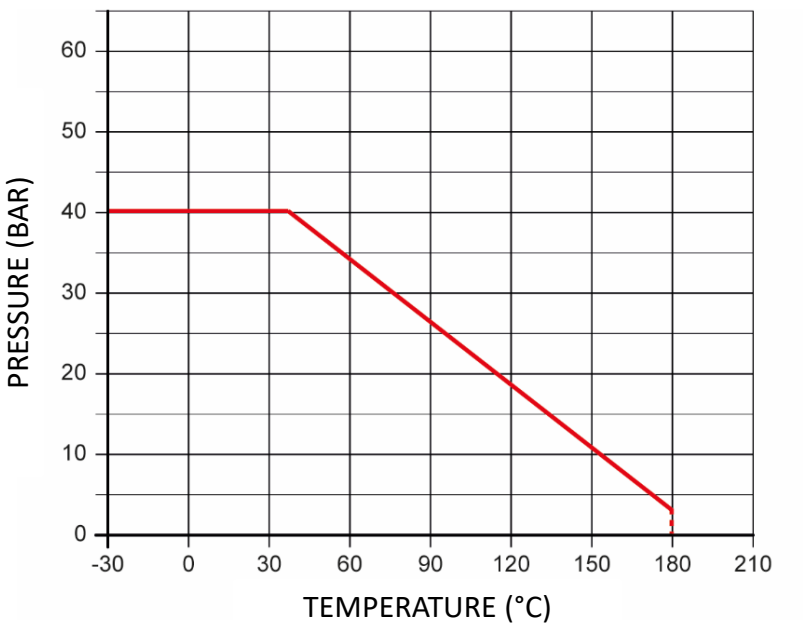

Warning: If the check valve is used with fluids that have a temperature above 60°C then people could burn themselves if they touch it.

Fluids

This check valve is suitable for non-abrasive and non-coagulable fluids, as long as the fluids are chemically compatible with the valve parts that they can come into contact with.

Disc opening pressure

Fluid direction	Pressure	DN 50	DN 65	DN 80	DN 100	DN 125	DN 150	DN 200	DN 250	DN 300
		2"	2"1/2	3"	4"	5"	6"	8"	10"	12"
⇧	mbar	40	40	55	55	55	40	40	40	40
⇨	mbar	40	40	50	50	50	30	30	30	30
⇩	mbar	35	35	45	45	45	20	20	20	20

Béné Inox – 11 chemin de la Pierre Blanche – 69800 SAINT-PRIEST – S.A.S with 240 000 € share capital – SIREN N° 311 810 287
Tel. N°: +33 (0)4 78 90 48 22 – Fax N°: +33 (0)4 78 90 69 59 – www.bene-inox.com – bene@bene-inox.com

Technical information, illustrations and photographs are provided for information only, they are not contractual. Some may vary according to the tolerances accepted in the profession and the applicable standards. All instructions for use, disassembly and maintenance are recommendations only. These could also vary depending on product usage conditions, its installation environment and purchaser requirements – of which the purchaser alone is responsible for their definition.

Pressure drop diagram

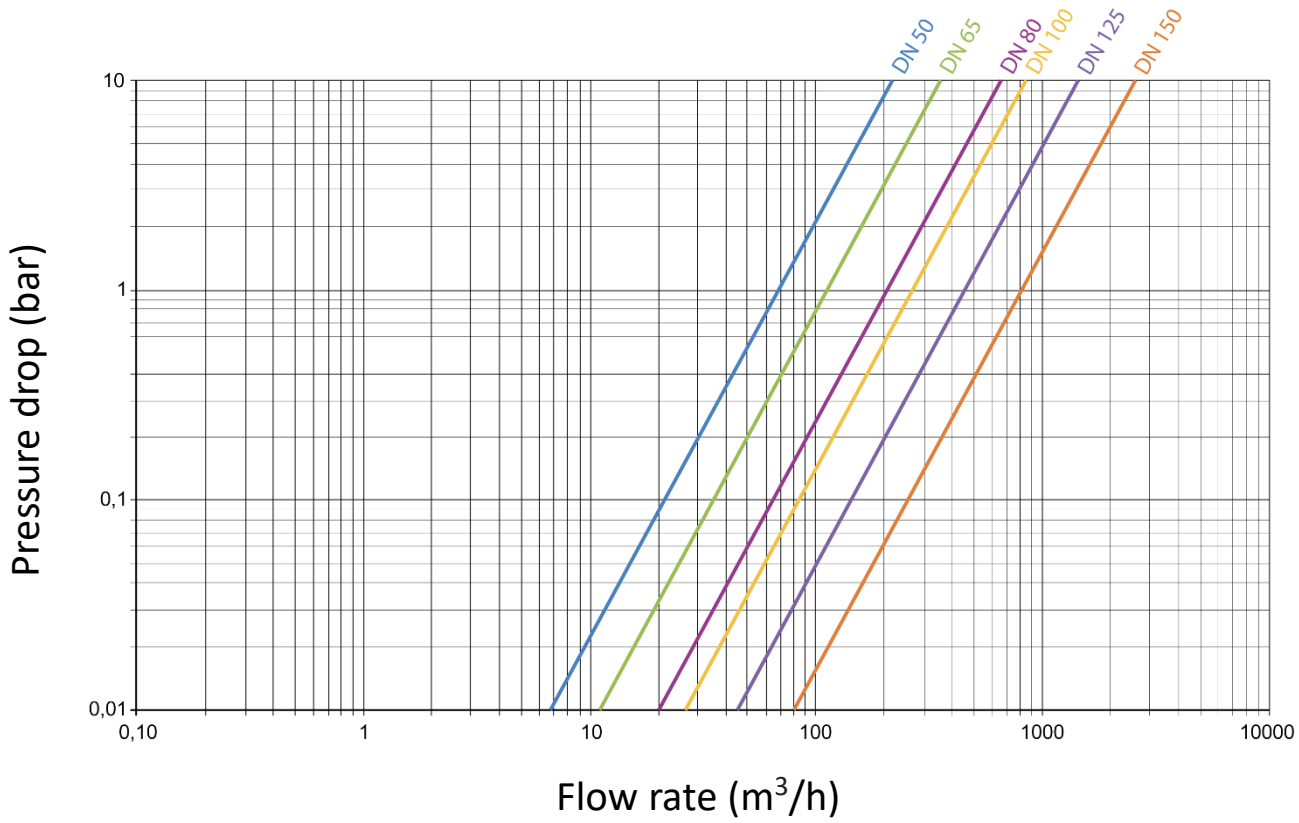

Flow coefficient

Dimensions	DN50	DN65	DN80	DN100	DN125	DN150	DN 200	DN 250	DN 300
	2"	2"1/2	3"	4"	5"	6"	8"	10"	12"
Kv (m³/h)	52,7	101,0	206,0	282,5	345,0	751,0	973,0	1235,0	1468,0

The flow coefficient Kv defines water flow rate through a device (valve, check valve etc.) for a pressure loss (ΔP) of 1 bar. Kv is expressed mathematically as:

$\Delta P = \frac{Q^2}{Kv^2}$ so: $Kv = \frac{Q}{\sqrt{\Delta P}}$

Q in m³/h
ΔP in bar

Kv in m³/h
Cv in GPM (Gallons per minute - US)

$Cv = 1.16 \times Kv$

Béné Inox – 11 chemin de la Pierre Blanche – 69800 SAINT-PRIEST – S.A.S with 240 000 € share capital – SIREN N° 311 810 287
Tel. N°: +33 (0)4 78 90 48 22 – Fax N°: +33 (0)4 78 90 69 59 – www.bene-inox.com – bene@bene-inox.com

Technical information, illustrations and photographs are provided for information only, they are not contractual. Some may vary according to the tolerances accepted in the profession and the applicable standards. All instructions for use, disassembly and maintenance are recommendations only. These could also vary depending on product usage conditions, its installation environment and purchaser requirements – of which the purchaser alone is responsible for their definition.

Assembly and maintenance instructions

Installation

You must install the check valve horizontally or vertically taking into account the direction in which fluids will pass through it.

Check that there is enough space and there are enough valves to isolate this section so that you can carry out maintenance operations where you are planning to install the check valve.
Check that the installation is clean and free from foreign bodies that could damage the check valve.

Check that all piping is perfectly aligned and that the piping support structure is dimensioned so that the check valve is not subject to any external stresses. The piping support structure must only support the pipes, not the check valve.

How to install a check valve:
Weld flanges (e.g. flanges with a collar) onto the piping and respect the required spacing and alignment of the mounting holes. You must check that the check valve is correctly lined up with the flanges during installation. For heavy parts, use lifting devices if necessary.

Clean the installation so that there are no foreign bodies in the piping.
Check that the check valve's discs can move smoothly.

Pressure test the installation according to the relevant standards, but do not exceed the check valve's specifications.

Maintenance

The check valve does not require any specific maintenance if it is used in normal operating conditions.

Depending on the fluid passing through the valve, you may need to change the gasket regularly.

You may need to change the check valve due to normal wear and tear, or if a fluid has damaged the valve and caused a leak or malfunction.

Spare parts

Repair kit
A repair kit contains:
- 7 hinge rings **4** and **5**
- 4 full gaskets **8**
- 2 springs **6**

DN (mm)	NB (inches)	Part number
50	3/8"	D5061-50
65	1/2"	D5061-65
80	3/4"	D5061-80
100	1"	D5061-100
125	1"1/2	D5061-125

DN (mm)	NB (inches)	Part number
125	1"1/2	D5061-125
150	2"	D5601-150
200	2"1/2	D5061-200
250	3"	D5061-250

Béné Inox – 11 chemin de la Pierre Blanche – 69800 SAINT-PRIEST – S.A.S with 240 000 € share capital – SIREN N° 311 810 287
Tel. N°: +33 (0)4 78 90 48 22 – Fax N°: +33 (0)4 78 90 69 59 – www.bene-inox.com – bene@bene-inox.com

Technical information, illustrations and photographs are provided for information only, they are not contractual. Some may vary according to the tolerances accepted in the profession and the applicable standards. All instructions for use, disassembly and maintenance are recommendations only. These could also vary depending on product usage conditions, its installation environment and purchaser requirements – of which the purchaser alone is responsible for their definition.

Standards and compliance

- Leak testing according to EN 12266/API 598.
- This valve complies with European Pressure Equipment Directive (PED) 2014/68/EU (formerly 97/23/EC).
- ATEX group II Category 2 G D in accordance with Directive 2014/34/EU certificate No. EX9A 091284 003

Béné Inox – 11 chemin de la Pierre Blanche – 69800 SAINT-PRIEST – S.A.S with 240 000 € share capital – SIREN N° 311 810 287
Tel. N°: +33 (0)4 78 90 48 22 – Fax N°: +33 (0)4 78 90 69 59 – www.bene-inox.com – bene@bene-inox.com

Technical information, illustrations and photographs are provided for information only, they are not contractual. Some may vary according to the tolerances accepted in the profession and the applicable standards. All instructions for use, disassembly and maintenance are recommendations only. These could also vary depending on product usage conditions, its installation environment and purchaser requirements – of which the purchaser alone is responsible for their definition.