Range 58
VALVES

Non-return check valves

Model 58722 3-part spring-loaded check valve for butt welding (BW) - 316 stainless steel

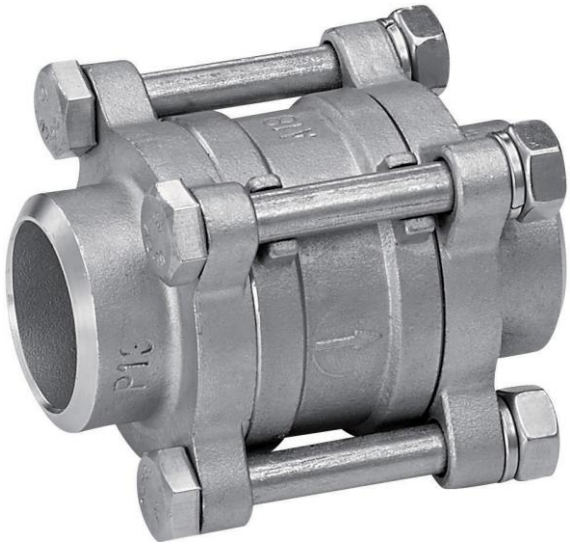

Specifications

Dimensions: DN8 to DN100 (1/4" to 4")
Connection: to be welded (butt welding)
Pressure: PN63 (1000 lbs)
Temperature: -25°C to +180°C
Material: 316 or CF8M stainless steel (for the parts that can come into contact with the transported fluid)
PTFE body gaskets
Metal/metal check valve

ATEX II 2 G D

ISO 9001 BUREAU VERITAS Certification

Béné Inox – 11 chemin de la Pierre Blanche – 69800 SAINT-PRIEST – S.A.S with 240 000 € share capital – SIREN N° 311 810 287
Tel. N°: +33 (0)4 78 90 48 22 – Fax N°: +33 (0)4 78 90 69 59 – www.bene-inox.com – bene@bene-inox.com

Technical information, illustrations and photographs are provided for information only, they are not contractual. Some may vary according to the tolerances accepted in the profession and the applicable standards. All instructions for use, disassembly and maintenance are recommendations only. These could also vary depending on product usage conditions, its installation environment and purchaser requirements – of which the purchaser alone is responsible for their definition.

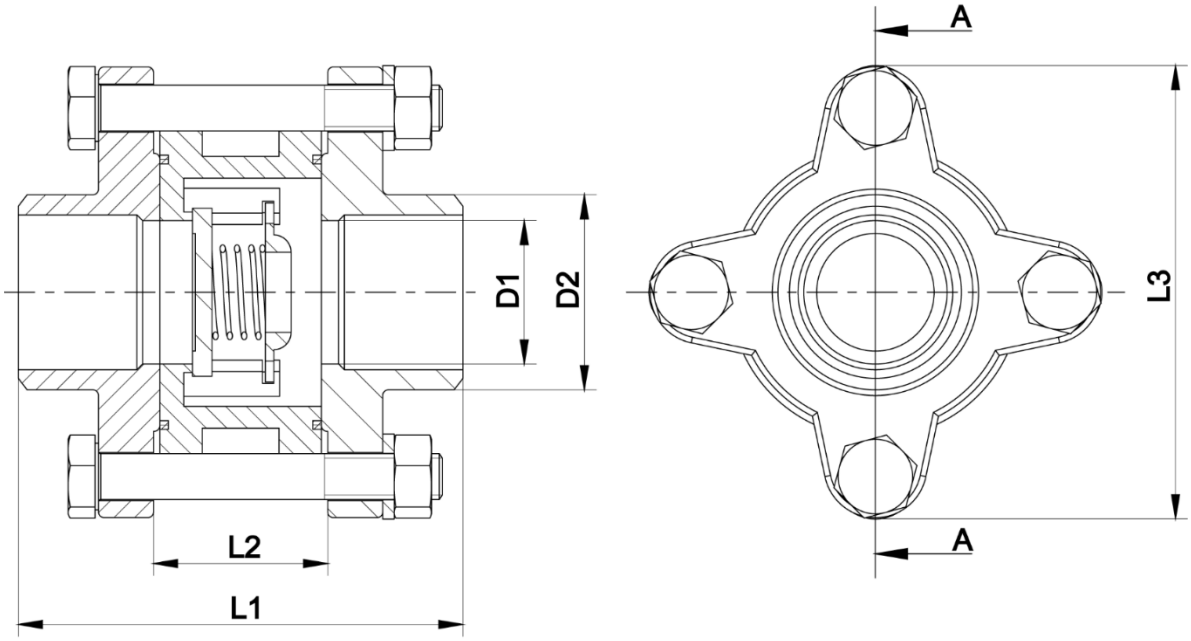

A-A cross section

DN (mm)	NB (inches)	D1 (mm)	D2 (mm)	L1 (mm)	L2 (mm)	L3 (mm)	Weight (kg)	Part number
8	**1/4"**	12.5	19	48.5	20	47	0.14	**458722-8**
10	**3/8"**	12.5	21	48.5	20	47	0.14	**458722-10**
15	**1/2"**	15	23	57	21	55	0.30	**458722-15**
20	**3/4"**	20	28	65	25	63	0.43	**458722-20**
25	**1"**	25	34	74	30	71	0.61	**458722-25**
32	**1"1/4**	32	41	82	36	89	1.00	**458722-32**
40	**1"1/2**	40	49	91	40	95	1.32	**458722-40**
50	**2"**	50	61	111	52	117	2.14	**458722-50**
65	**2"1/2**	65	78	125.5	52	155	4.50	**458722-65**
80	**3"**	76	94	142	60	162	6.80	**458722-80**
100	**4"**	94	115	165	62	220	10.00	**458722-100**

Béné Inox – 11 chemin de la Pierre Blanche – 69800 SAINT-PRIEST – S.A.S with 240 000 € share capital – SIREN N° 311 810 287
Tel. N°: +33 (0)4 78 90 48 22 – Fax N°: +33 (0)4 78 90 69 59 – www.bene-inox.com – bene@bene-inox.com

Technical information, illustrations and photographs are provided for information only, they are not contractual. Some may vary according to the tolerances accepted in the profession and the applicable standards. All instructions for use, disassembly and maintenance are recommendations only. These could also vary depending on product usage conditions, its installation environment and purchaser requirements – of which the purchaser alone is responsible for their definition.

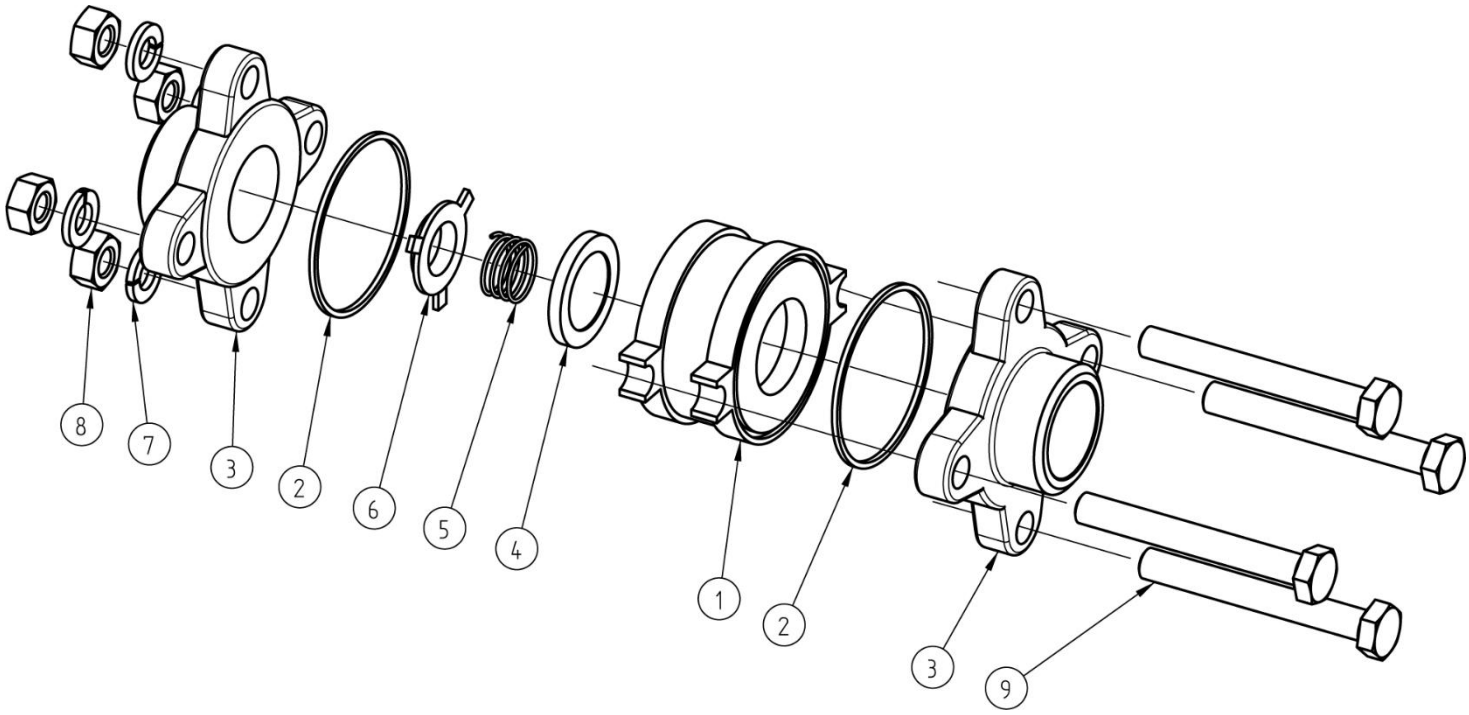

N°	Part Name	Material
1	BODY	CF8M
2	BODY GASKET	PTFE
3	FLANGE (END TO BE WELDED)	CF8M
4	CHECK VALVE DISC	AISI 316
5	SPRING	AISI 316
6	SPRING SUPPORT	AISI 316
7	LOCK WASHER (TIE ROD)	A2
8	NUT (TIE ROD)	A2
9	BOLT (TIE ROD)	A2

Béné Inox – 11 chemin de la Pierre Blanche – 69800 SAINT-PRIEST – S.A.S with 240 000 € share capital – SIREN N° 311 810 287
Tel. N°: +33 (0)4 78 90 48 22 – Fax N°: +33 (0)4 78 90 69 59 – www.bene-inox.com – bene@bene-inox.com

Technical information, illustrations and photographs are provided for information only, they are not contractual. Some may vary according to the tolerances accepted in the profession and the applicable standards. All instructions for use, disassembly and maintenance are recommendations only. These could also vary depending on product usage conditions, its installation environment and purchaser requirements – of which the purchaser alone is responsible for their definition.

Use

Pressure and temperature

For pressure/temperature ratings, see the graph below.

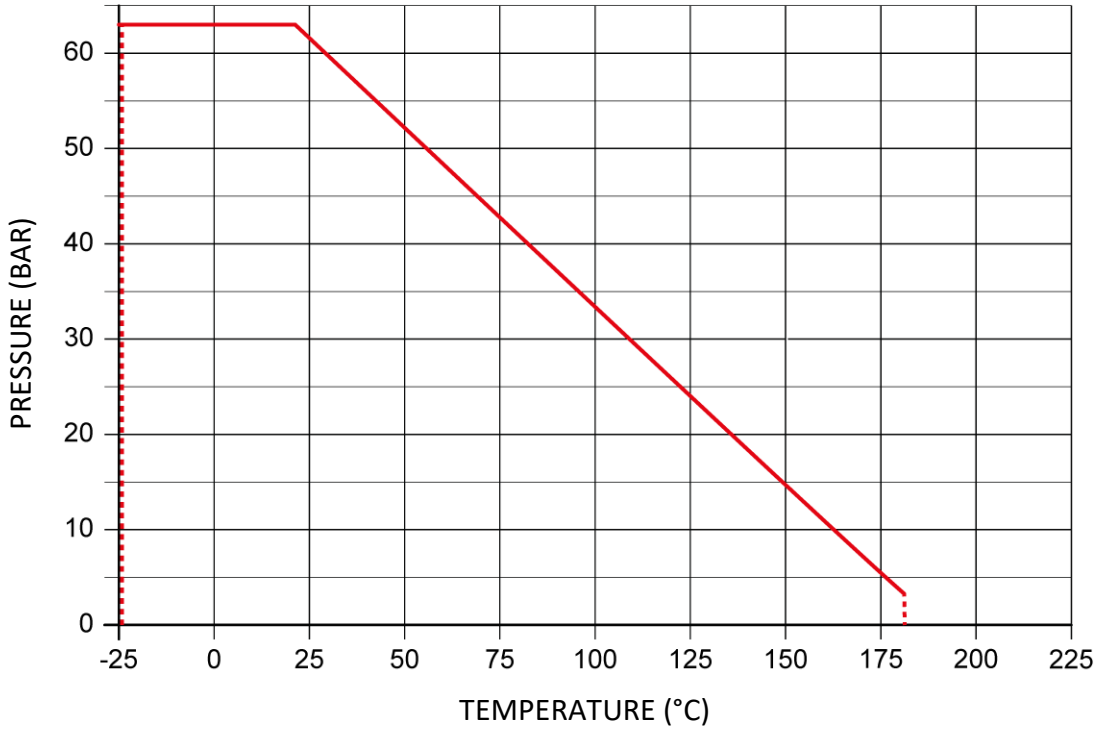

Warning: If the check valve is used with fluids that have a temperature above 60°C then people could burn themselves if they touch it.

Fluids

This check valve is suitable for non-abrasive and non-coagulable fluids, as long as the fluids are chemically compatible with the valve parts that they can come into contact with.

This check valve is not suitable for gases since the leakage rate can be significant.

Opening pressure (OP)

Dimensions	DN8	DN10	DN15	DN20	DN25	DN32	DN40	DN50	DN65	DN80	DN100
	1/4"	3/8"	1/2"	3/4"	1"	1"1/4	1"1/2	2"	2"1/2	3"	4"
OP (mbar)	24~30									20~26	

Béné Inox – 11 chemin de la Pierre Blanche – 69800 SAINT-PRIEST – S.A.S with 240 000 € share capital – SIREN N° 311 810 287
Tel. N°: +33 (0)4 78 90 48 22 – Fax N°: +33 (0)4 78 90 69 59 – www.bene-inox.com – bene@bene-inox.com

Technical information, illustrations and photographs are provided for information only, they are not contractual. Some may vary according to the tolerances accepted in the profession and the applicable standards. All instructions for use, disassembly and maintenance are recommendations only. These could also vary depending on product usage conditions, its installation environment and purchaser requirements – of which the purchaser alone is responsible for their definition.

Flow coefficient Kv

Dimensions	DN8	DN10	DN15	DN20	DN25	DN32	DN40	DN50	DN65	DN80	DN100
	1/4"	3/8"	1/2"	3/4"	1"	1"1/4	1"1/2	2"	2"1/2	3"	4"
Kv (m^3/h)	2.1	2.8	4.4	6.8	10.0	17.0	26.0	43.0	75.0	112.0	172.0

The flow coefficient Kv defines water flow rate through a device (valve, check valve etc.) for a pressure loss (ΔP) of 1 bar. Kv is expressed mathematically as:

$$\Delta P = \frac{Q^2}{Kv^2} \quad \text{so:} \quad Kv = \frac{Q}{\sqrt{\Delta P}}$$

Q in m^3/h
ΔP in bar

Kv in m^3/h
Cv in GPM (Gallons per minute - US)

$$Cv = 1.16 \times Kv$$

Pressure drop

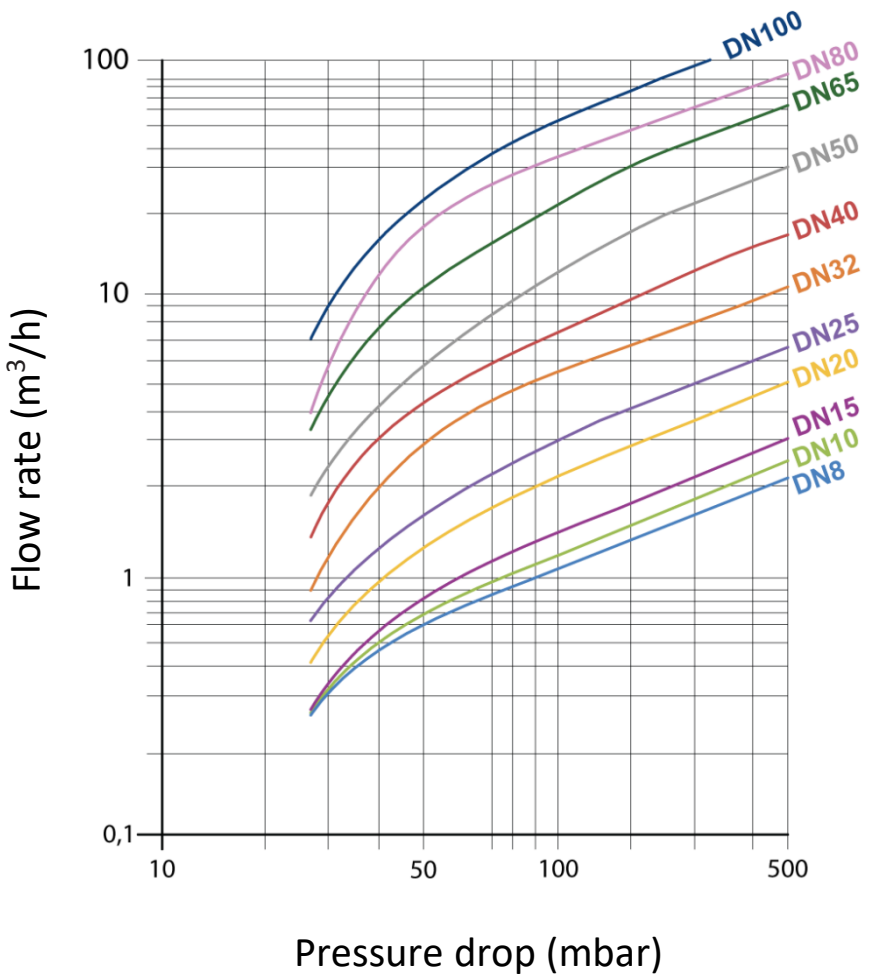

Technical information, illustrations and photographs are provided for information only, they are not contractual. Some may vary according to the tolerances accepted in the profession and the applicable standards. All instructions for use, disassembly and maintenance are recommendations only. These could also vary depending on product usage conditions, its installation environment and purchaser requirements – of which the purchaser alone is responsible for their definition.

Assembly and maintenance instructions

Installation

When you install the check valve make sure that the arrow on it is pointing in the direction in which fluids will pass through it.

You can install a check valve vertically (for fluids moving upwards) or horizontally.

Make sure that the check valve can work optimally:

You must install the check valve sufficiently far away from any zones of turbulence generated by the piping (elbows, reductions, etc.) or by any another apparatus (pumps, etc.). You can do this by installing straight pipes (that are each at least 4 to 5 times longer than the check valve's DN) in front of and behind the check valve.

Check that there is enough space and there are enough valves to isolate this section so that you can carry out maintenance operations where you are planning to install the check valve.
Check that the installation is clean and free from foreign bodies that could damage the check valve.

Check that all piping is perfectly aligned and that the piping support structure is dimensioned so that the check valve is not subject to any external stresses. The piping support structure must only support the pipes, not the check valve.

How to install a check valve requiring welding:
Welding must be carried out by qualified personnel.
You must disassemble the check valve to avoid damaging it during welding. Tack weld the fitted check valve, or use a jig, to ensure the correct alignment of the flanges.
Disassemble the check valve (remove the central part) to weld its 2 flanges to the piping, and then reassemble the check valve after welding.
Clean the installation so that there are no foreign bodies in the piping.
Check that the check valve's disc can move smoothly.

Pressure test the installation according to the relevant standards, but do not exceed the check valve's specifications.

Maintenance

The check valve does not require any specific maintenance if it is used in normal operating conditions.
If any leaks appear around the valve during operation (or during the valve installation testing phase) tighten its tie rods.
You may need to change some of the valve's parts due to normal wear and tear, or if a fluid has damaged the valve and caused a leak or malfunction.
If this is the case see the 'Assembly/Disassembly' section below.

Technical information, illustrations and photographs are provided for information only, they are not contractual. Some may vary according to the tolerances accepted in the profession and the applicable standards. All instructions for use, disassembly and maintenance are recommendations only. These could also vary depending on product usage conditions, its installation environment and purchaser requirements – of which the purchaser alone is responsible for their definition.

Assembly / Disassembly

The maintenance and removal/installation of the check valve must be carried out by personnel who are qualified and trained for this type of intervention.

Warning: Before you work on the check valve, check that the installation has been stopped and that the piping is empty and is not pressurised.
Warning: If the check valve is used with fluids that have a temperature above 60°C then people could burn themselves if they touch it.
Warning: Beware of hazardous materials - follow the instructions provided by the suppliers.

Remove the tie rods (bolt **9** + washer **7** + nut **8**).
Remove the central part of the check valve; keep the flanges **3** attached to the piping.
Remove the check valve's disc **4** and the 2 body gaskets **2**.

Clean and inspect all of the parts of the valve. Replace any worn parts. You should replace any sealing parts that have been disassembled.

Follow the disassembly steps in reverse to reassemble the valve.
Tighten the tie rods in a criss-cross pattern,

Pressure test the check valve and check the check valve disc's movement before you put the installation back into service.

Spare parts

Gasket kit
A gasket kit contains:
- 2 body gaskets **2**

DN (mm)	NB (inches)	Part number
8	1/4"	D5421-8
10	3/8"	D5421-10
15	1/2"	D5421-15
20	3/4"	D5421-20
25	1"	D5421-25
32	1"1/4	D5421-32

DN (mm)	NB (inches)	Part number
40	1"1/2	D5421-40
50	2"	D5421-50
65	2"1/2	D5421-65
80	3"	D5421-80
100	4"	D5421-100

Standards and compliance

- Leak testing according to EN 12266/API 598.
- This valve complies with European Pressure Equipment Directive (PED) 2014/68/EU (formerly 97/23/EC).
- ATEX group II Category 2 G D in accordance with Directive 2014/34/EU certificate No. EX9A 091284 003

Béné Inox – 11 chemin de la Pierre Blanche – 69800 SAINT-PRIEST – S.A.S with 240 000 € share capital – SIREN N° 311 810 287
Tel. N°: +33 (0)4 78 90 48 22 – Fax N°: +33 (0)4 78 90 69 59 – www.bene-inox.com – bene@bene-inox.com

Technical information, illustrations and photographs are provided for information only, they are not contractual. Some may vary according to the tolerances accepted in the profession and the applicable standards. All instructions for use, disassembly and maintenance are recommendations only. These could also vary depending on product usage conditions, its installation environment and purchaser requirements – of which the purchaser alone is responsible for their definition.