Range 58
VALVES

Ball valves

ISO 7-1

Model 58213 3-way ATEX valve female BSP with ISO mounting plate - 316 stainless steel

1000 lbs / PN63 - Reduced L-bore - Lockable handle

Specifications

Dimensions: DN8 to DN50 (1/4" to 2")

Connection: BSP female thread ISO 7-1(Rp)

Pressure: PN63 (1000 lbs)

Temperature: -29°C to +175°C

Material: 316 or CF8M stainless steel
(for the stainless steel parts that can come into contact with the transported fluid)
TFM 1600 seats

PTFE + FKM gaskets

ISO 5211 mounting plate for pneumatic or electric actuator

ATEX II 2 GD

ISO 9001 BUREAU VERITAS Certification

ATTESTATION DE CONFORMITÉ SANITAIRE ACS

Béné Inox – 11 chemin de la Pierre Blanche – 69800 SAINT-PRIEST – S.A.S with 240 000 € share capital – SIREN N° 311 810 287
Tel. N°: +33 (0)4 78 90 48 22 – Fax N°: +33 (0)4 78 90 69 59 – www.bene-inox.com – bene@bene-inox.com

Technical information, illustrations and photographs are provided for information only, they are not contractual. Some may vary according to the tolerances accepted in the profession and the applicable standards. All instructions for use, disassembly and maintenance are recommendations only. These could also vary depending on product usage conditions, its installation environment and purchaser requirements – of which the purchaser alone is responsible for their definition.

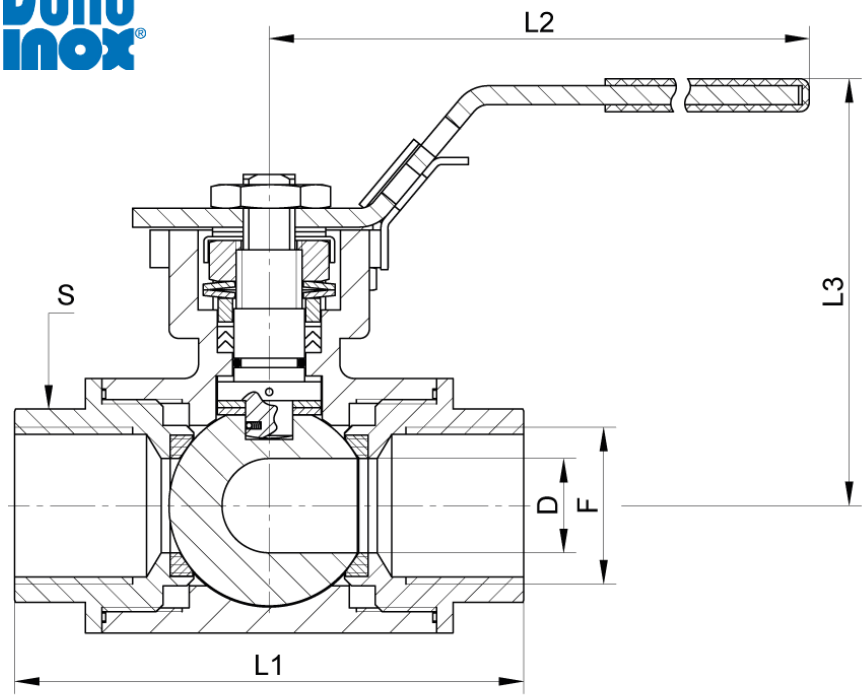

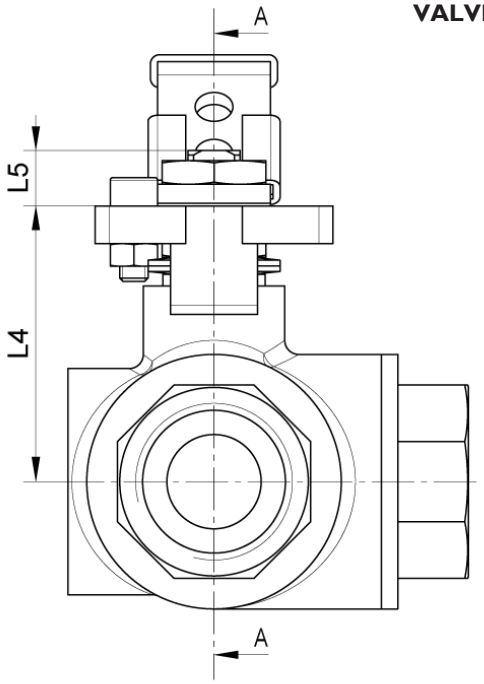

A-A CROSS SECTION

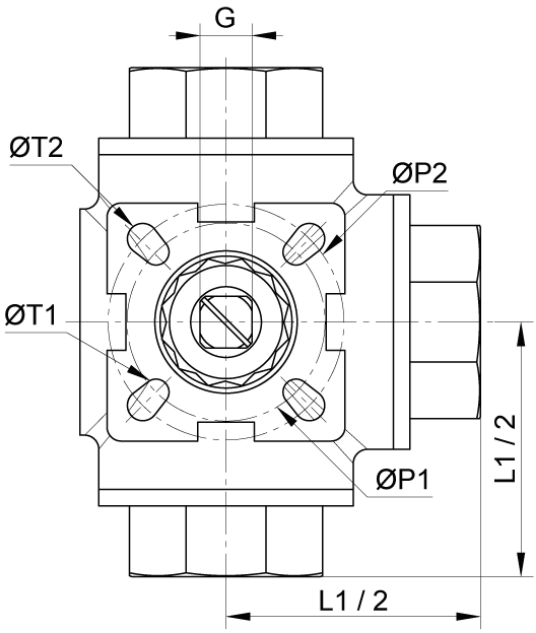

L-shaped bore

Position 1 Position 2

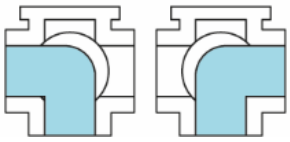

DN (mm)	NB (inches)	D (mm)	F (inches)	L1 (mm)	L2 (mm)	L3 (mm)	L4 (mm)	L5 (mm)	G (mm)	ØP1 (mm)	ØP2 (mm)	ØT1 (mm)	ØT2 (mm)	S (mm)	Weight (kg)	Part number
8	**1/4"**	11	Rp 1/4"	79	147	73	43	9	9	36	42	6	6	27	0.86	**458213-8**
10	**3/8"**	11	Rp 3/8"	79	147	73	43	9	9	36	42	6	6	27	0.83	**458213-10**
15	**1/2"**	11	Rp 1/2"	79	147	73	43	9	9	36	42	6	6	27	0.77	**458213-15**
20	**3/4"**	15	Rp 3/4"	88	147	79	49	9	9	36	50	6	7	34	1.05	**458213-20**
25	**1"**	20	Rp 1"	108	177	91	60	11	11	42	50	6	7	41	1.88	**458213-25**
32	**1"1/4**	25	Rp 1"1/4	124	177	93	63	11	11	42	70	6	9	50	3.07	**458213-32**
40	**1"1/2**	32	Rp 1"1/2	135	215	105	74	14	14	50	70	7	9	56	4.26	**458213-40**
50	**2"**	40	Rp 2"	164	215	115	83	14	14	50	70	7	9	70	7.10	**458213-50**

Béné Inox – 11 chemin de la Pierre Blanche – 69800 SAINT-PRIEST – S.A.S with 240 000 € share capital – SIREN N° 311 810 287
Tel. N°: +33 (0)4 78 90 48 22 – Fax N°: +33 (0)4 78 90 69 59 – www.bene-inox.com – bene@bene-inox.com

Technical information, illustrations and photographs are provided for information only, they are not contractual. Some may vary according to the tolerances accepted in the profession and the applicable standards. All instructions for use, disassembly and maintenance are recommendations only. These could also vary depending on product usage conditions, its installation environment and purchaser requirements – of which the purchaser alone is responsible for their definition.

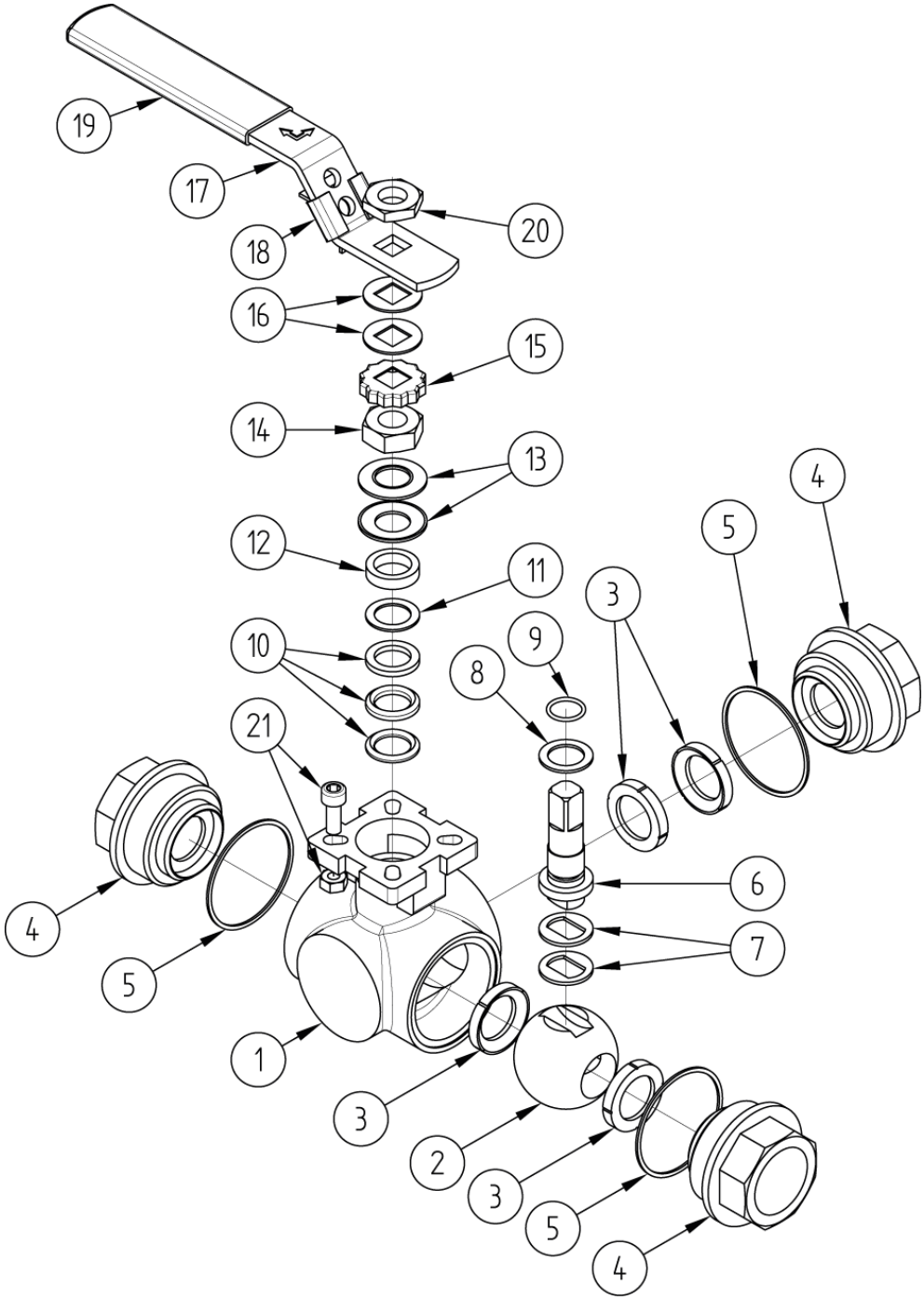

N°	Part Name	Material	N°	Part Name	Material
1	BODY	ASTM CF8M	12	SPACER	AISI 316
2	BALL	AISI 316	13	BELLEVILLE WASHER	AISI 301
3	SEAT RING	TFM 1600	14	SHAFT NUT (GLAND)	A194-8
4	FLANGE (FEMALE THREADED END)	ASTM CF8M	15	STOP NUT	AISI 304
5	BODY GASKET	PTFE	16	FLAT WASHER	AISI 304
6	ANTI-STATIC SHAFT	AISI 316	17	HANDLE	AISI 304
7	THRUST WASHER	AISI 316	18	LOCKING DEVICE	AISI 304
8	SEALING RING (SHAFT/BODY)	PTFE	19	HANDLE COVERING	PVC
9	O-RING (SHAFT/BODY)	FKM	20	HANDLE NUT	A194-8
10	PACKING (V-WASHER)	PTFE	21	BOLT (HANDLE STOP)	A2-70
11	SUPPORT RING	STAINLESS STEEL + PTFE			

Béné Inox – 11 chemin de la Pierre Blanche – 69800 SAINT-PRIEST – S.A.S with 240 000 € share capital – SIREN N° 311 810 287
Tel. N°: +33 (0)4 78 90 48 22 – Fax N°: +33 (0)4 78 90 69 59 – www.bene-inox.com – bene@bene-inox.com

Technical information, illustrations and photographs are provided for information only, they are not contractual. Some may vary according to the tolerances accepted in the profession and the applicable standards. All instructions for use, disassembly and maintenance are recommendations only. These could also vary depending on product usage conditions, its installation environment and purchaser requirements – of which the purchaser alone is responsible for their definition.

Use

This valve is a shut-off valve: it must be either fully open or fully closed.
Do not leave the valve partially open: an opening default, or leaving the ball valve partially open to decrease flow, could lead to cavitation which is likely to damage the valve.

You must lift the locking device **18** to be able to turn the valve's handle **17**. You must always turn the handle by a complete 1/4 turn, until it cannot be turned any further.

The position of the ball is shown on the top of the shaft. You can lock the handle with a padlock, in the open or closed position.

Pressure and temperature

The data plate indicates the valve's maximum operating pressure and the minimum and maximum operating temperatures (but this information does not cover any associated actuator or servo motor, so if you use one of these with the valve please also check their respective data plates to find this information). The operating temperature is between -29°C and +175°C for TFM 1600 seats.

For pressure/temperature ratings, see the graph below.

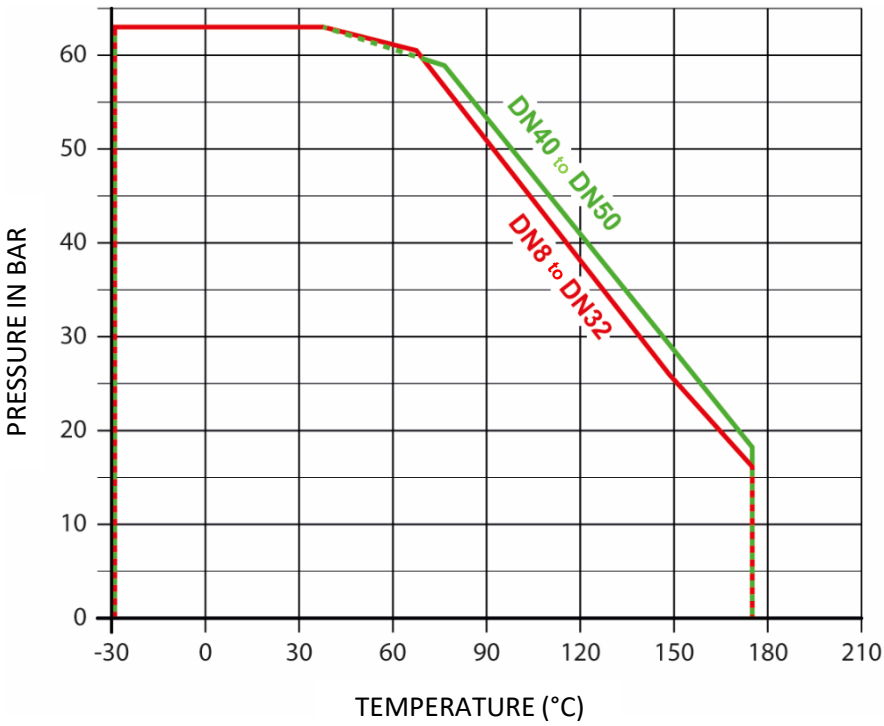

Warning: If the valve is used with fluids that have a temperature above 60°C then people could burn themselves if they touch it.

Technical information, illustrations and photographs are provided for information only, they are not contractual. Some may vary according to the tolerances accepted in the profession and the applicable standards. All instructions for use, disassembly and maintenance are recommendations only. These could also vary depending on product usage conditions, its installation environment and purchaser requirements – of which the purchaser alone is responsible for their definition.

Flow coefficient and pressure loss

Dimensions	DN8	DN10	DN15	DN20	DN25	DN32	DN40	DN50
	1/4"	3/8"	1/2"	3/4"	1"	1"1/4	1"1/2	2"
Kv (m^3/h)	11	11	13	15	31	39	62	103

The flow coefficient Kv defines water flow rate through a device (e.g. valve, check valve etc.) for a pressure loss (ΔP) of 1 bar. Kv is expressed mathematically as:

$$\Delta P = \frac{Q^2}{Kv^2} \quad \text{so:} \quad Kv = \frac{Q}{\sqrt{\Delta P}}$$

Q in m^3/h — Kv in m^3/h — $Cv = 1.16 \times Kv$

ΔP in bar — Cv in GPM (Gallons per minute - US)

Fluids

This valve is suitable for non-abrasive and non-coagulable fluids, as long as the fluids are chemically compatible with the valve parts that they can come into contact with.

Motorisation

You can motorise the valve through direct mounting using its ISO mounting plate (ISO 5211 standard), see the corresponding product data sheets.

- Model **50210**: valve with spring return or double-acting type aluminium pneumatic actuator
- Model **50212**: valve with spring return or double-acting type stainless steel pneumatic actuator
- Model **50216**: valve with IP65 electric servo motor
- Model **50222 - 50226**: valve with IP68 electric servo motor
- Model **50228 - 50232**: valve with IP68 electric servo motor
- Model **50234 - 50238**: valve with ATEX IP68 electric servo motor

Required operating torque for valve motorisation

Dimensions	-	DN8	DN10	DN15	DN20	DN25	DN32	DN40	DN50
Operating torque for water at 10 bar	Nm	9	9	9	9	14	18	26	38
Operating torque for water at 20 bar	Nm	9	9	9	10	15	18	26	42
Operating torque for water at 50 bar	Nm	9	9	9	10	15	20	28	46
Operating torque for water at 63 bar	Nm	9	9	9	10	15	22	30	50
Coupling characteristics	Mounting plate	F03 F04	F03 F04	F03 F04	F03 F05	F04 F05	F04 F07	F05 F07	F05 F07
	Square	9x9	9x9	9x9	9x9	11x11	11x11	14x14	14x14

It is recommended to use a minimum safety factor of +30% for motorisation with a pneumatic actuator and +50% for motorisation with an electric actuator.
You can find this information on the product data sheet for each actuator.

Béné Inox – 11 chemin de la Pierre Blanche – 69800 SAINT-PRIEST – S.A.S with 240 000 € share capital – SIREN N° 311 810 287
Tel. N°: +33 (0)4 78 90 48 22 – Fax N°: +33 (0)4 78 90 69 59 – www.bene-inox.com – bene@bene-inox.com

Technical information, illustrations and photographs are provided for information only, they are not contractual. Some may vary according to the tolerances accepted in the profession and the applicable standards. All instructions for use, disassembly and maintenance are recommendations only. These could also vary depending on product usage conditions, its installation environment and purchaser requirements – of which the purchaser alone is responsible for their definition.

Use in ATEX zones

Manual valves (model **58213**) and pneumatic valves (models **50210** and **50212**) can be used in ATEX II 2 GD zones.
The valve's anti-static shaft ensures electrical continuity between the valve's ball, shaft and body.
If you add any other element (e.g. position detection, solenoid valves etc.), you must check that this addition can be used in ATEX zones.

You **cannot use** models **50216**, **50222** and **50228** etc. (valves with electric servo motors) **in ATEX zones.**

You can only use models **50234** and **50238** with electric servo motors in ATEX II 2 GD zones.

Assembly and maintenance instructions

Installation

You can install the valve in any position. However, check that there is enough space to move the valve's handle where you are planning to install the valve.
Check that the installation is clean and free from foreign bodies that could damage the valve.

Check that all piping is perfectly aligned and that the piping support structure is dimensioned so that the valve is not subject to any external stresses. The piping support structure must only support the pipes, not the valve.

How to install a valve with threaded ends:
Use a wrench that is suitable for the hexagon-shaped valve ends. Do not use the valve's body or handle when you are tightening the assembly (this could damage the valve). Use a product that is suitable for the working conditions (e.g. PTFE tape) to make sure the valve's threaded connections are sealed correctly.

Clean the installation leaving the valve open so that there are no foreign bodies between the ball and the body. Check the valve is operating correctly.

Pressure test the installation according to the relevant standards (e.g. EN 12266-1), but do not exceed the valve's specifications.

Maintenance

The valve does not require any specific maintenance if it is used in normal operating conditions.

If the valve is never opened or closed during normal operation then you should regularly open and close the valve to check that it is still working correctly.

If any leaks appear around the shaft **6**, during operation or during the valve installation testing phase, tighten the shaft nut (gland) **14**. You can usually stop leaks by tightening the nut by 30 to 60°. But you must not over tighten the nut, as this could reduce the system's service life. You must adhere to the tightening torques in table **A** (see page 7).

Béné Inox – 11 chemin de la Pierre Blanche – 69800 SAINT-PRIEST – S.A.S with 240 000 € share capital – SIREN N° 311 810 287
Tel. N°: +33 (0)4 78 90 48 22 – Fax N°: +33 (0)4 78 90 69 59 – www.bene-inox.com – bene@bene-inox.com

Technical information, illustrations and photographs are provided for information only, they are not contractual. Some may vary according to the tolerances accepted in the profession and the applicable standards. All instructions for use, disassembly and maintenance are recommendations only. These could also vary depending on product usage conditions, its installation environment and purchaser requirements – of which the purchaser alone is responsible for their definition.

You may need to change some of the valve's parts due to unusual wear and tear, or if a fluid has damaged the valve and caused a leak or malfunction.
If this is the case see the 'Assembly / Disassembly' and 'Spare Parts' sections below.

Assembly / Disassembly

The maintenance and removal/installation of the valve must be carried out by personnel who are qualified and trained for this type of intervention.

Warning: Before you work on the valve, check that the installation has been stopped and that the piping is empty and is not pressurised.
Warning: If the valve is used with fluids that have a temperature above 60°C then people could burn themselves if they touch it.
Warning: Beware of hazardous materials - follow the instructions provided by the suppliers.

Remove the valve; unscrew the flanges **4**.

Remove the 3 o-rings **5** and the seat rings **3**.

Close the valve to remove the ball **2**. Check the condition of the ball's surface.

You must replace it at the same time as the TFM 1600 seat rings **3** if it is scratched or damaged.

If you need to replace the shaft's sealing, remove the parts from the upper part of the valve in the following order: handle nut **20**, handle **17** and flat washer(s) **16** in the case of a manual valve (otherwise remove the valve's motorisation), then the stop nut **15**, shaft nut **14**, Belleville washers **13** and stainless steel rings (**11** + **12**).
Push the shaft **6** towards the inside of the body **1** in order to remove it, and remove the o-ring **9** and the PTFE ring **8** (be careful you do not scratch the shaft).
Remove the PTFE shaft packing (v-washers) **10** from its housing (be careful you do not scratch the surface of this housing).
Clean and inspect all of the parts of the valve. Replace any worn parts. You are strongly advised to replace all the shaft's sealing parts (gaskets and PTFE packing) if it has been disassembled, as well as the ball's TFM 1600 seat rings.
Follow the disassembly steps in reverse to reassemble the valve.
You must adhere to the tightening torques in table **A** below when you tighten the shaft packing (shaft + PTFE packing + washers, etc.) with the shaft nut **14**.

Pressure test the valve and check that it can be opened and closed before you put the installation back into service.

Table A	Dimensions	DN8	DN10	DN15	DN20	DN25	DN32	DN40	DN50
Tightening torque for shaft nut	Nm	8.0~9.0	8.0~9.0	8.0~9.0	8.0~9.0	9.0~11.3	9.0~11.3	15.8~18.1	15.8~18.1

Béné Inox – 11 chemin de la Pierre Blanche – 69800 SAINT-PRIEST – S.A.S with 240 000 € share capital – SIREN N° 311 810 287
Tel. N°: +33 (0)4 78 90 48 22 – Fax N°: +33 (0)4 78 90 69 59 – www.bene-inox.com – bene@bene-inox.com

Technical information, illustrations and photographs are provided for information only, they are not contractual. Some may vary according to the tolerances accepted in the profession and the applicable standards. All instructions for use, disassembly and maintenance are recommendations only. These could also vary depending on product usage conditions, its installation environment and purchaser requirements – of which the purchaser alone is responsible for their definition.

Spare parts

Gasket kits

A gasket kit contains:
- 4 seat rings **3**
- 3 body gaskets **5**
- 1 shaft ring **8**
- 1 o-ring **9**
- 1 shaft packing **10**
- 1 support ring **11**

(quantity could vary according to the DN)

DN (mm)	NB (inches)	Gasket kit Part no.
8	1/4"	D5351-8
10	3/8"	D5351-10
15	1/2"	D5351-15
20	3/4"	D5351-20

DN (mm)	NB (inches)	Gasket kit Part no.
25	1"	D5351-25
32	1"1/4	D5351-32
40	1"1/2	D5351-40
50	2"	D5351-50

Handle for valves with L-shaped bore **17**; **18**; **19**

DN (mm)	NB (inches)	Handle Part no.
8 to 20	1/4" to 3/4"	D5241-820L
25 to 32	1" to 1"1/4	D5241-2532L
40 to 50	1/2" to 2"	D5241-4050L

Customisation possibilities

Position raiser with ISO mounting plate

DN (mm)	NB (inches)	Length (mm)	Position raiser with ISO plate Part no.
8 to 20	1/4" to 3/4"	100	458208-1
25 to 32	1" to 1"1/4	100	458208-2
40 to 50	1"1/2 to 2"	100	458208-3

Oval operating wheel

DN (mm)	NB (inches)	Operating wheel Part no.
15 to 20	1/2" to 3/4"	458136-1
25 to 32	1" to 1"1/4	458136-2
40 to 50	1"1/2 to 2"	458136-3

Spring return (deadman) handle

DN (mm)	NB (inches)	Deadman handle Part no.
15 to 20	1/2" to 3/4"	458136-1
25 to 32	1" to 1"1/4	458136-2
40 to 50	1"1/2 to 2"	458136-3

Béné Inox – 11 chemin de la Pierre Blanche – 69800 SAINT-PRIEST – S.A.S with 240 000 € share capital – SIREN N° 311 810 287
Tel. N°: +33 (0)4 78 90 48 22 – Fax N°: +33 (0)4 78 90 69 59 – www.bene-inox.com – bene@bene-inox.com

Technical information, illustrations and photographs are provided for information only, they are not contractual. Some may vary according to the tolerances accepted in the profession and the applicable standards. All instructions for use, disassembly and maintenance are recommendations only. These could also vary depending on product usage conditions, its installation environment and purchaser requirements – of which the purchaser alone is responsible for their definition.

Standards and compliance

- This valve is designed in accordance with ASME B16.34 and EN 12516-3 standards.
- Connection: BSP female thread in accordance with ISO 7-1.
- Leak testing according to EN 12266/API 598.
- This valve complies with European Pressure Equipment Directive (PED) 2014/68/EU
  - from DN8 according to Annex 1 Paragraph 4.3.
  - from DN32 according to Annex III Module H: Certificate No. DGR 0036-QS-1045-23.
- ATEX Group II Category 2 G D in accordance with Directive 2014/34/EU: Certificate No. EX9A 082326 0003
  - II 2G Ex h IIC T6…T1 Gb (gas and vapour).
  - II 2D Ex h IIIC T85°C…T450°C Db (combustible dust).
- ACS certified (French certification for drinking-water piping sanitary compliance).

Béné Inox – 11 chemin de la Pierre Blanche – 69800 SAINT-PRIEST – S.A.S with 240 000 € share capital – SIREN N° 311 810 287
Tel. N°: +33 (0)4 78 90 48 22 – Fax N°: +33 (0)4 78 90 69 59 – www.bene-inox.com – bene@bene-inox.com

Technical information, illustrations and photographs are provided for information only, they are not contractual. Some may vary according to the tolerances accepted in the profession and the applicable standards. All instructions for use, disassembly and maintenance are recommendations only. These could also vary depending on product usage conditions, its installation environment and purchaser requirements – of which the purchaser alone is responsible for their definition.